ASSEMBLY INSTRUCTION

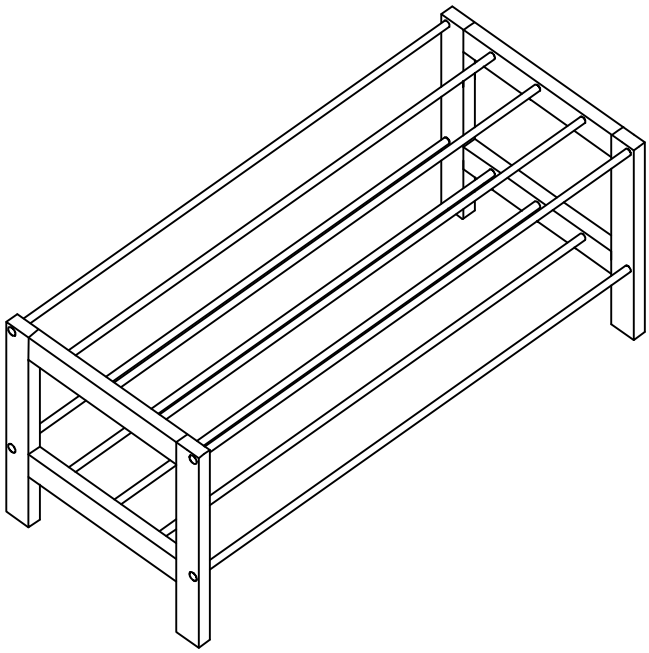

① X2

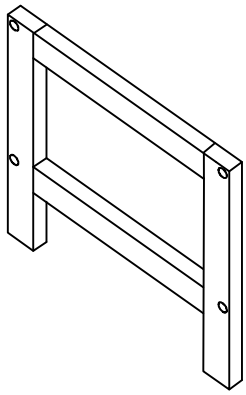

② X4

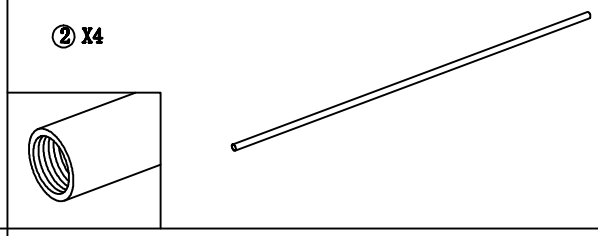

Ⓐ X8

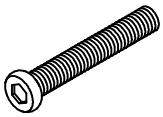

Ⓑ X1

③ X6

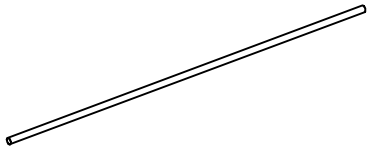

1

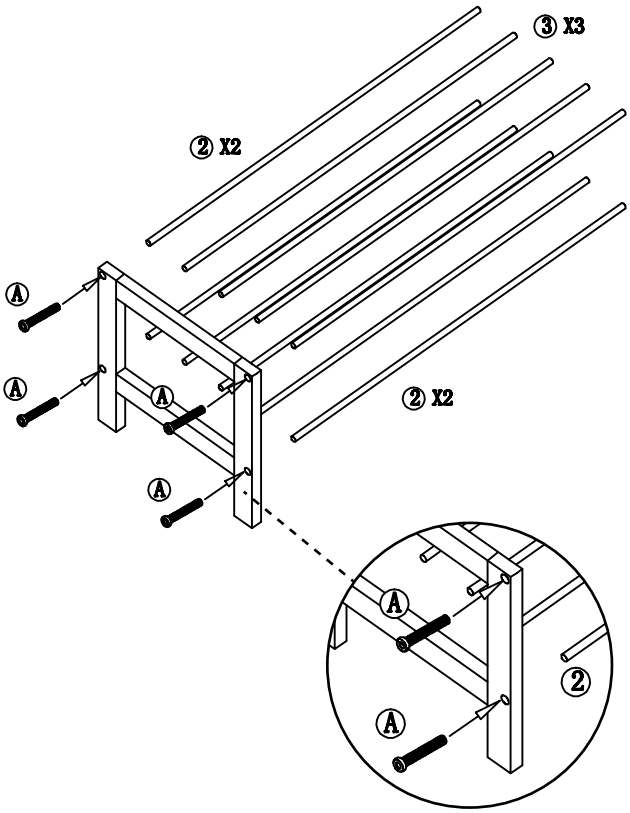
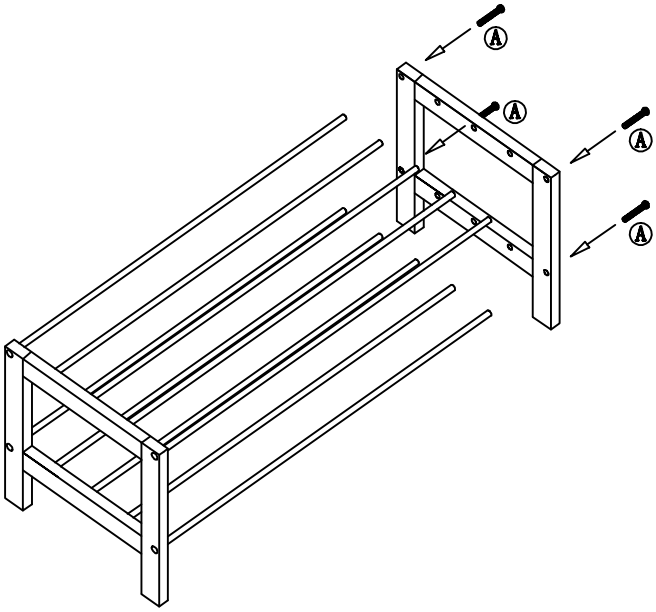
2